# Control and Test Software for IRAM WideX Correlator

Sébastien Blanchet

Institut de Radioastronomie Millimétrique

13th International Conference on Accelerator and Large Experimental Physics Control Systems

# Overview


1. Presentation
2. Technical choices
3. Software
4. Running modes
5. Conclusion

# Institut de Radioastronomie Millimétrique (IRAM)

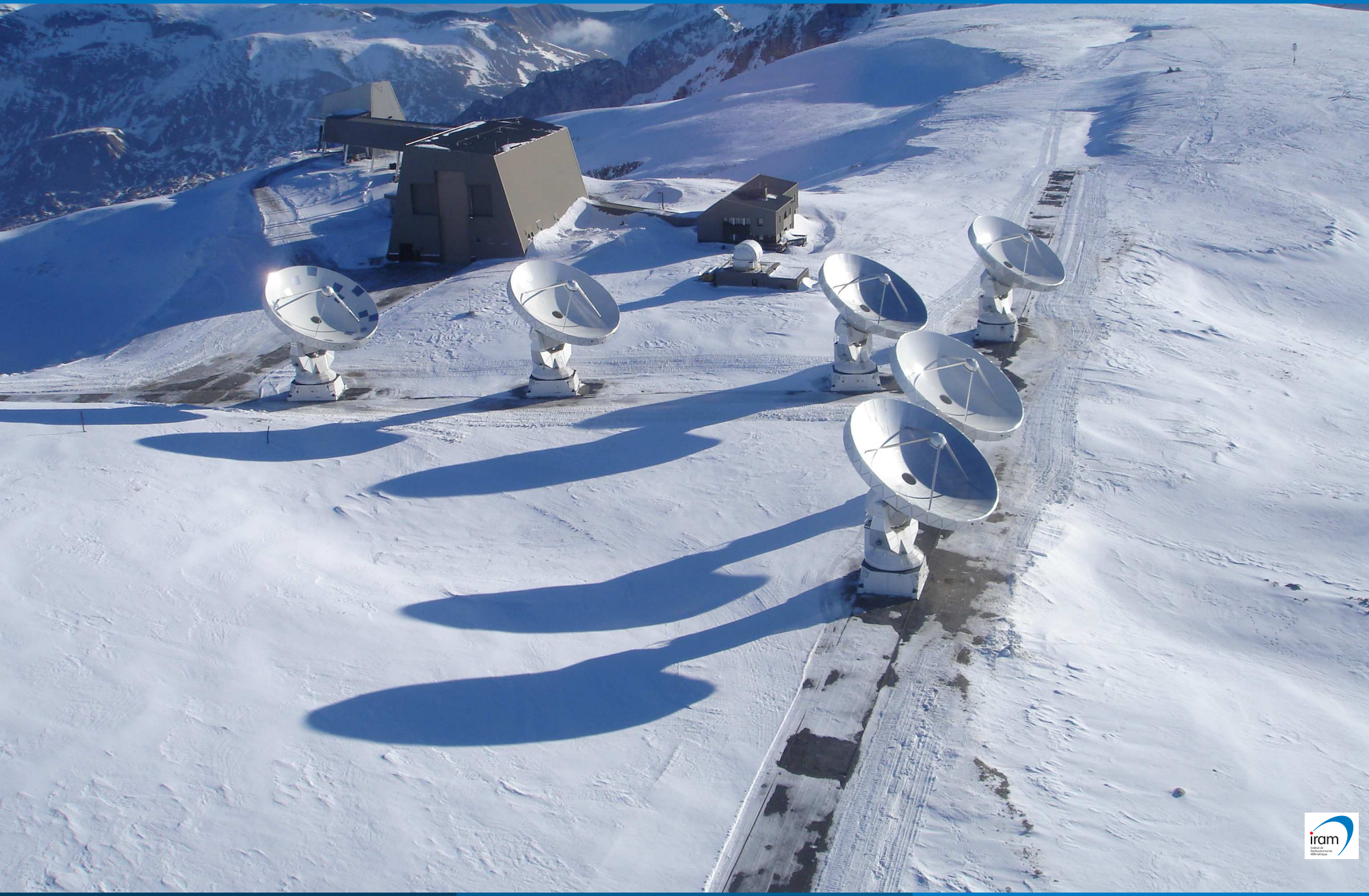

# What is a correlator?

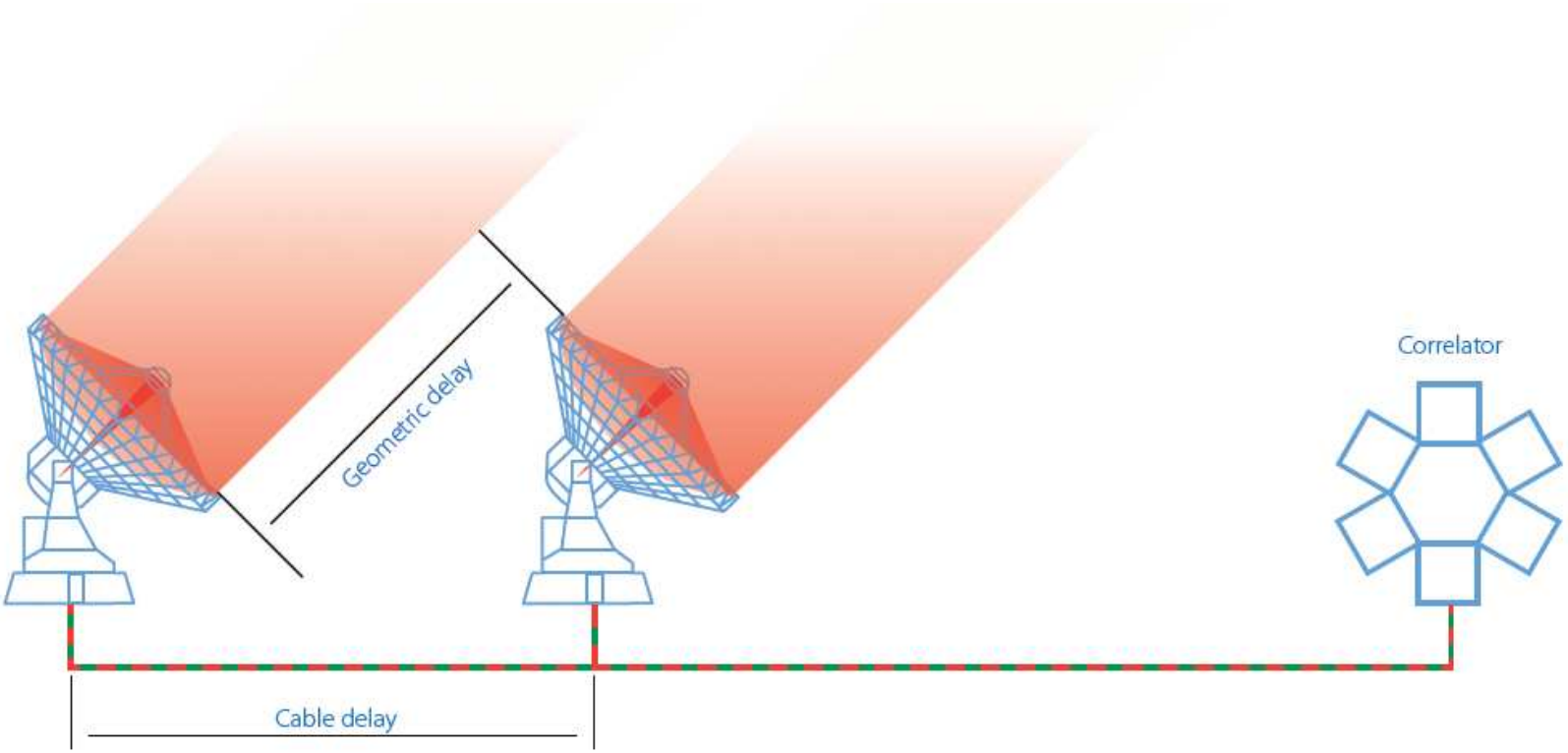


The correlator filters the background noise and extracts the weak cosmic signal.

# The WideX correlator

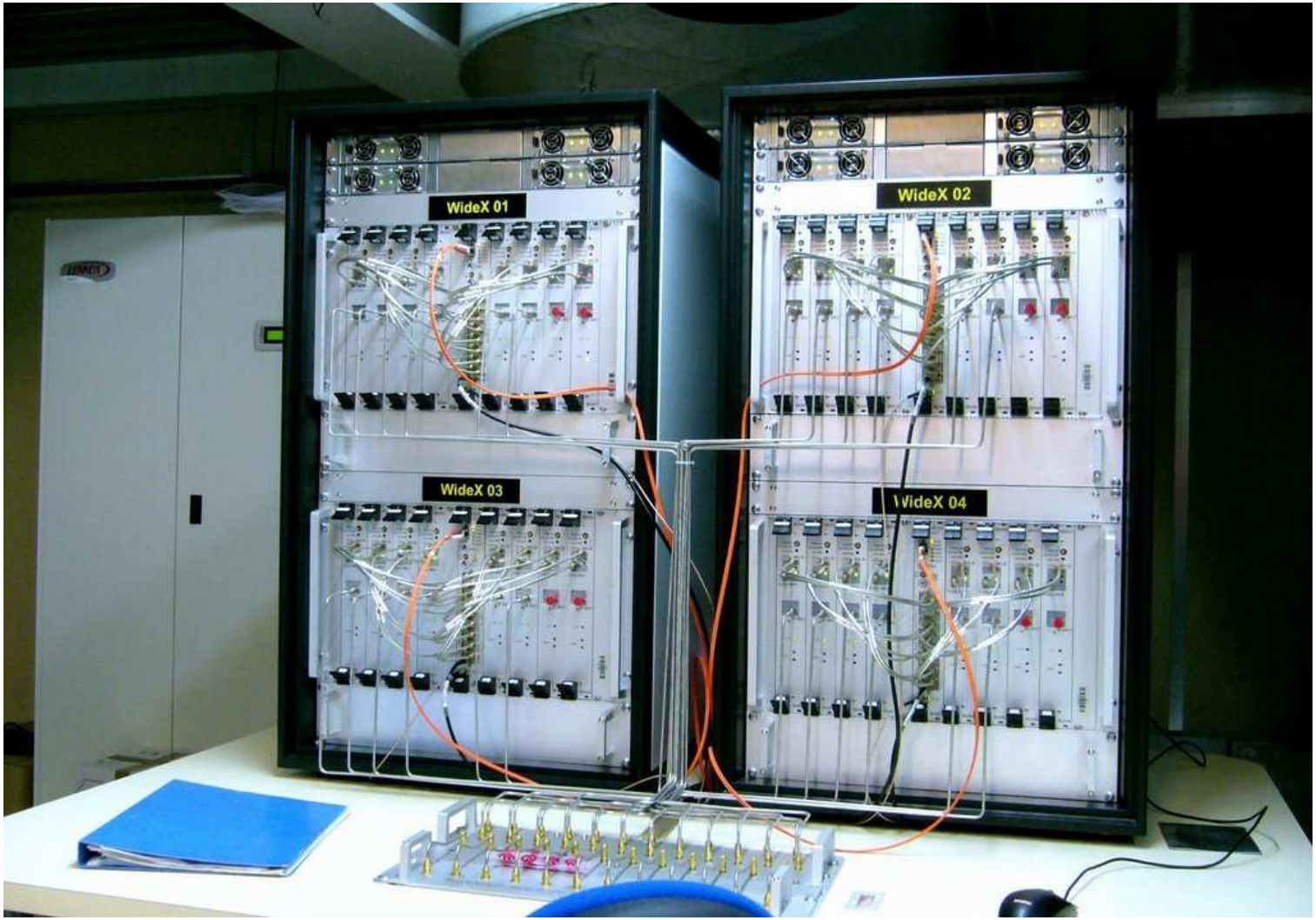


WideX correlator on the observatory site.

# Main numbers

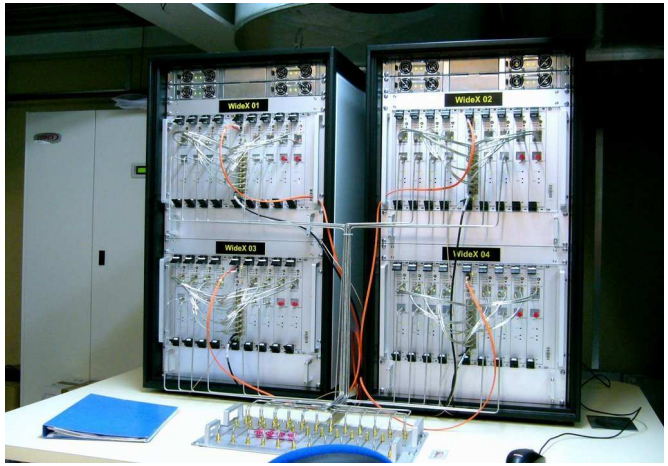

# Main numbers

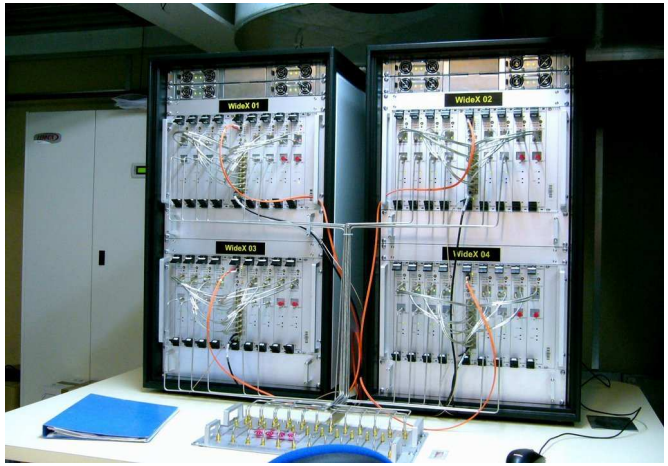

1 792 correlator chips

# Main numbers

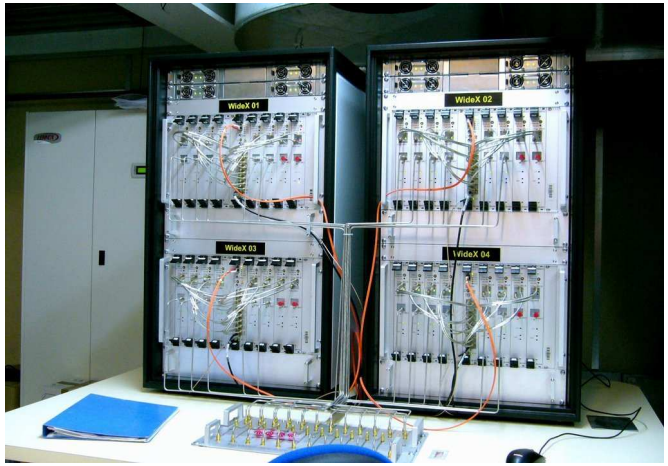

1 792 correlator chips

1 792 Mbit/s data output

# Main numbers

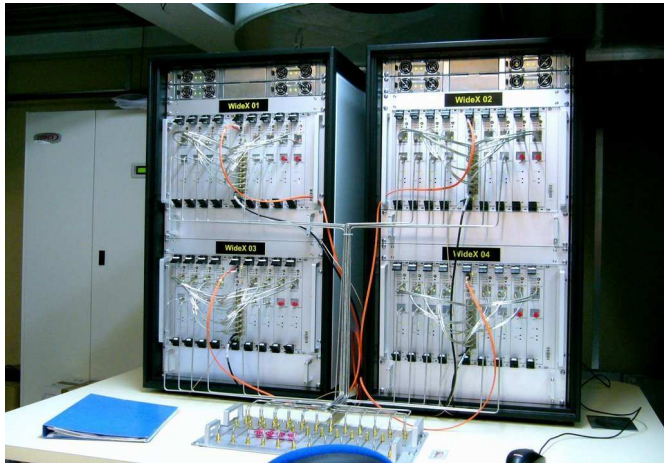

1 792 correlator chips

1 792 Mbit/s data output

Real-time software at 32 Hz

# Overview


1. Presentation
2. Technical choices
3. Software
4. Running modes
5. Conclusion

# CERN Detector Data Link (DDL)

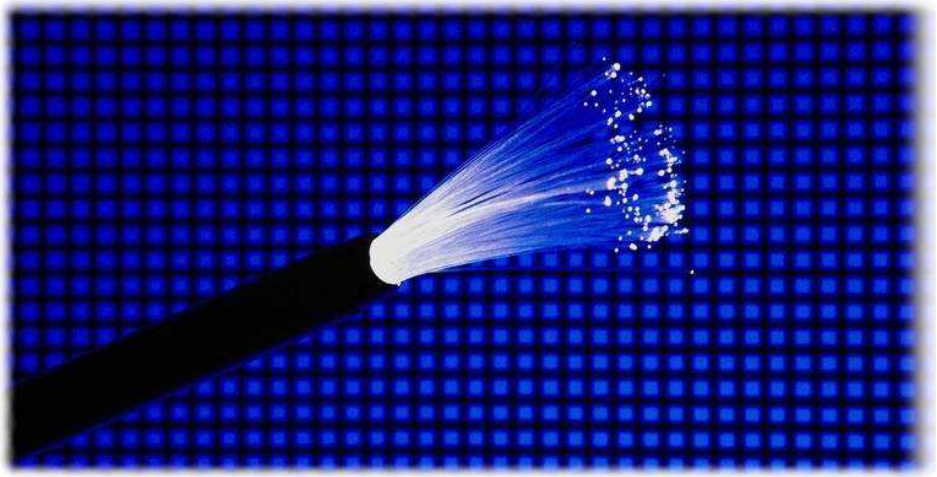

# CERN Detector Data Link (DDL)

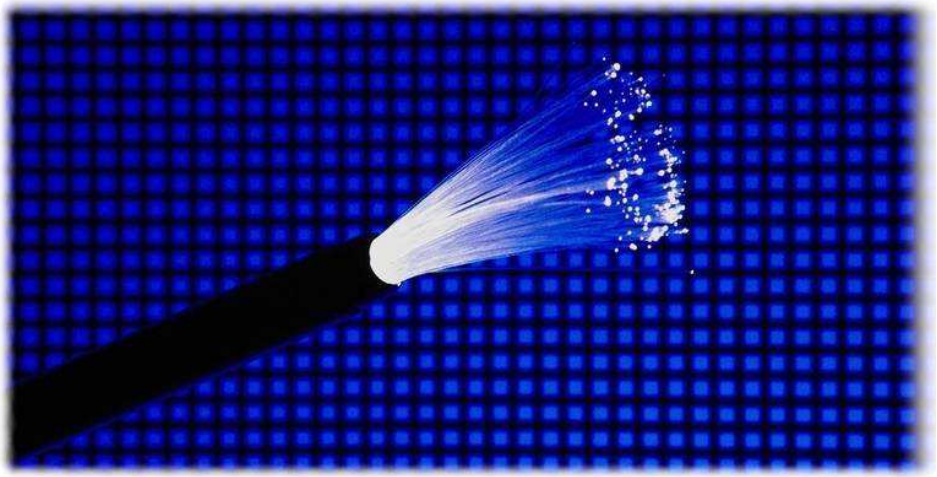

# CERN Detector Data Link (DDL)

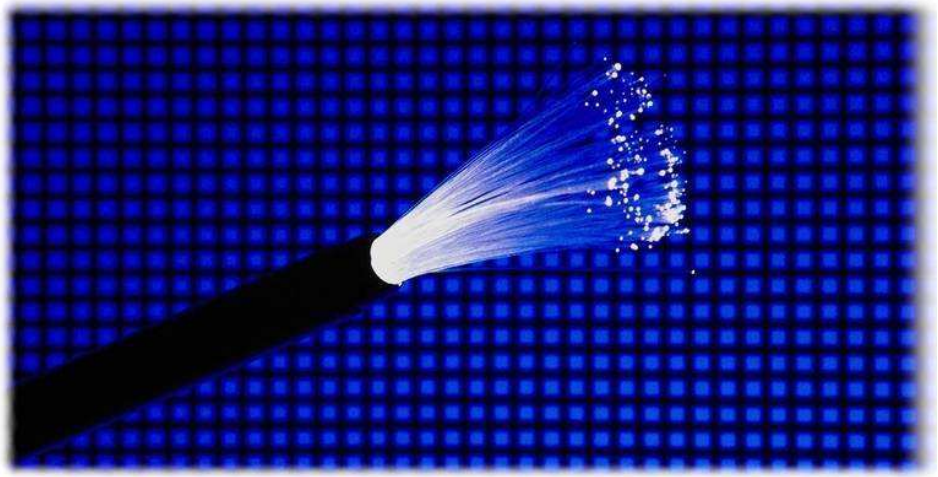

Source Interface Unit

# CERN Detector Data Link (DDL)

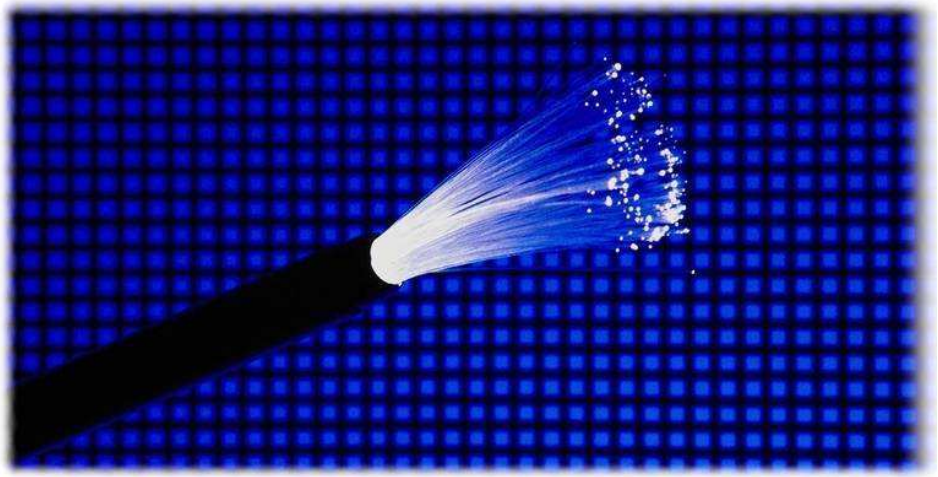

Source Interface Unit

Destination Interface Unit

# CERN Detector Data Link (DDL)

Source Interface Unit

- Fast (1.5 Gbit/s per link)

Destination Interface Unit

# CERN Detector Data Link (DDL)

Source Interface Unit

- Fast (1.5 Gbit/s per link)
- Easy to use

Destination Interface Unit

# CERN Detector Data Link (DDL)

Source Interface Unit

- Fast (1.5 Gbit/s per link)
- Easy to use
- Low cost

Destination Interface Unit

# RealTime Application Interface (RTAI)

# RealTime Application Interface (RTAI)

# Overview


1. Presentation
2. Technical choices
3. Software
4. Running modes
5. Conclusion

# Time diagram

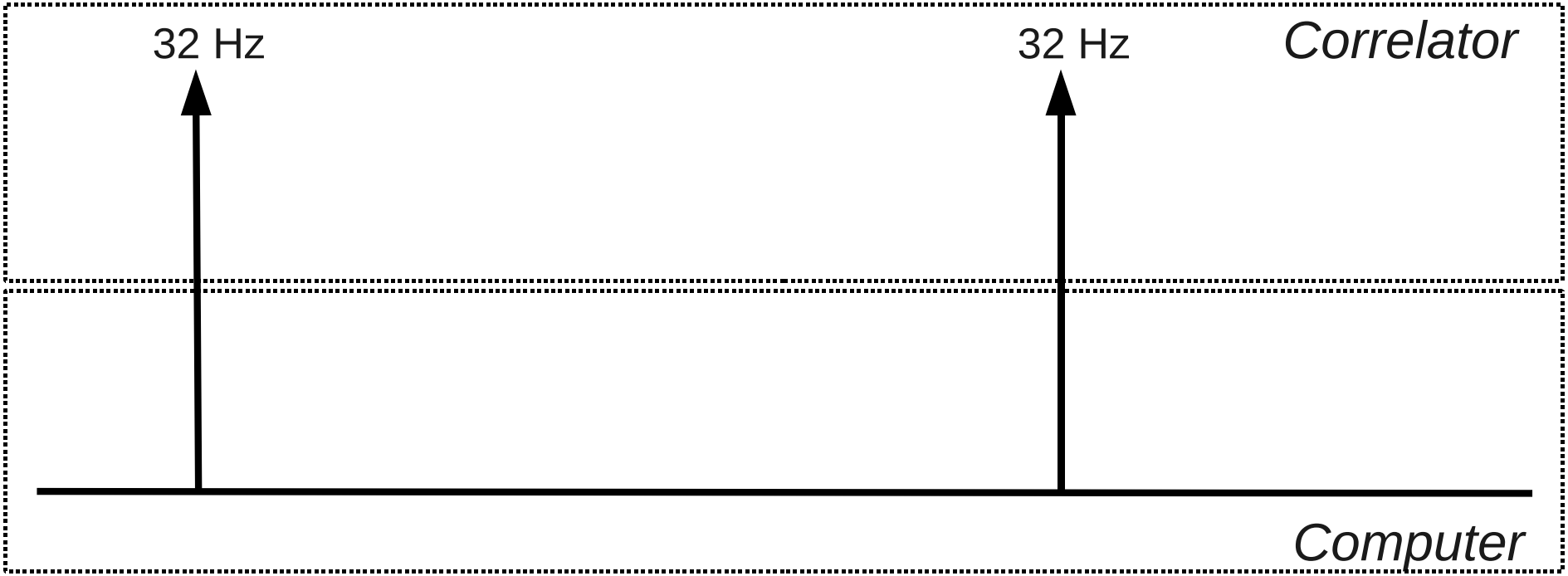

# Time diagram

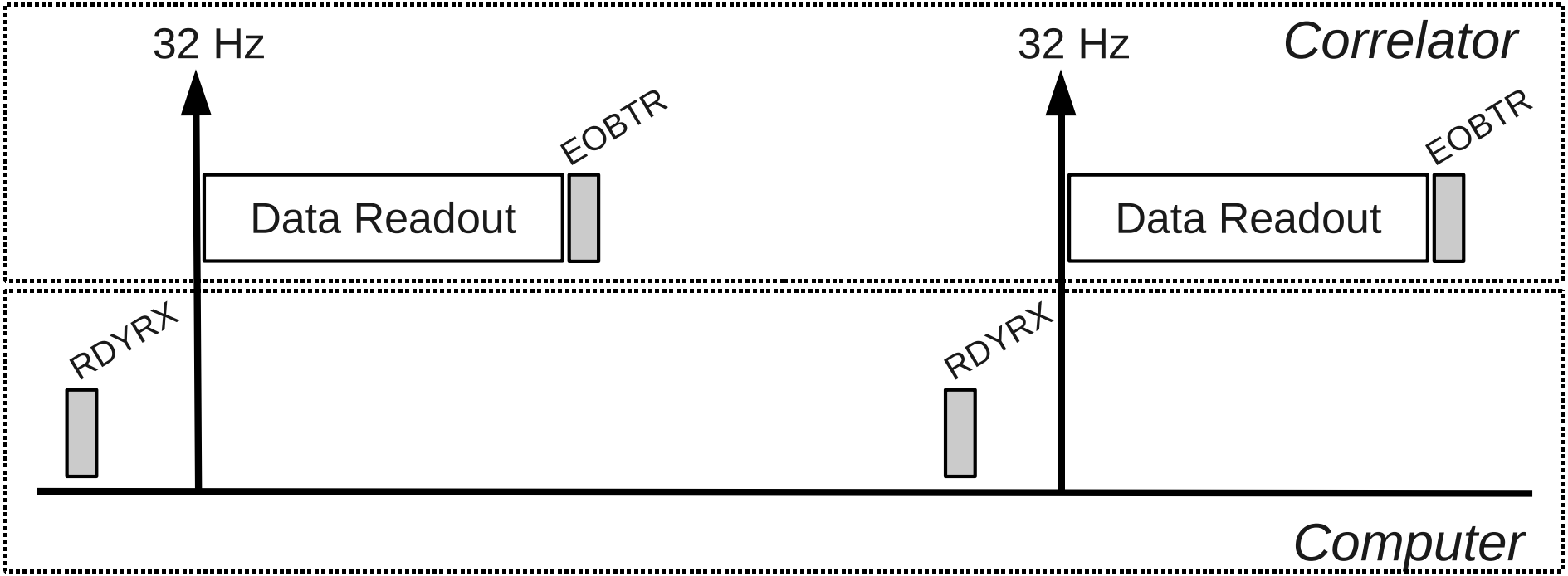

# Time diagram

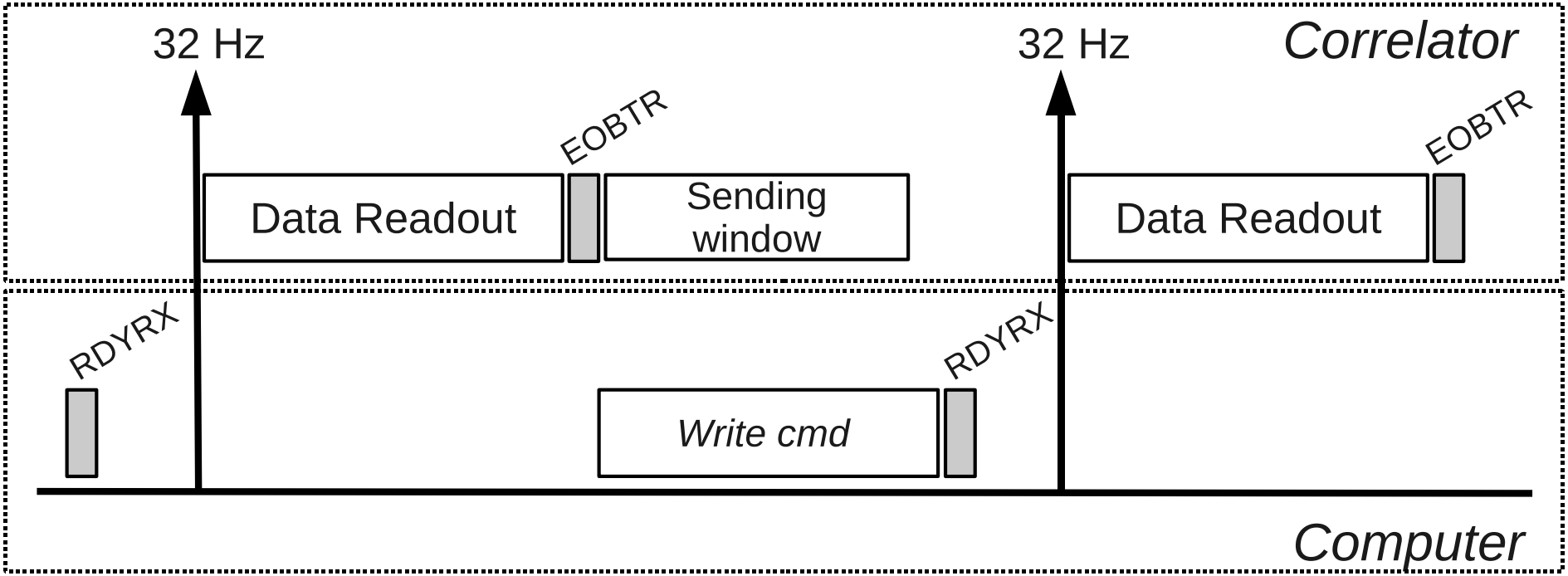

# Time diagram

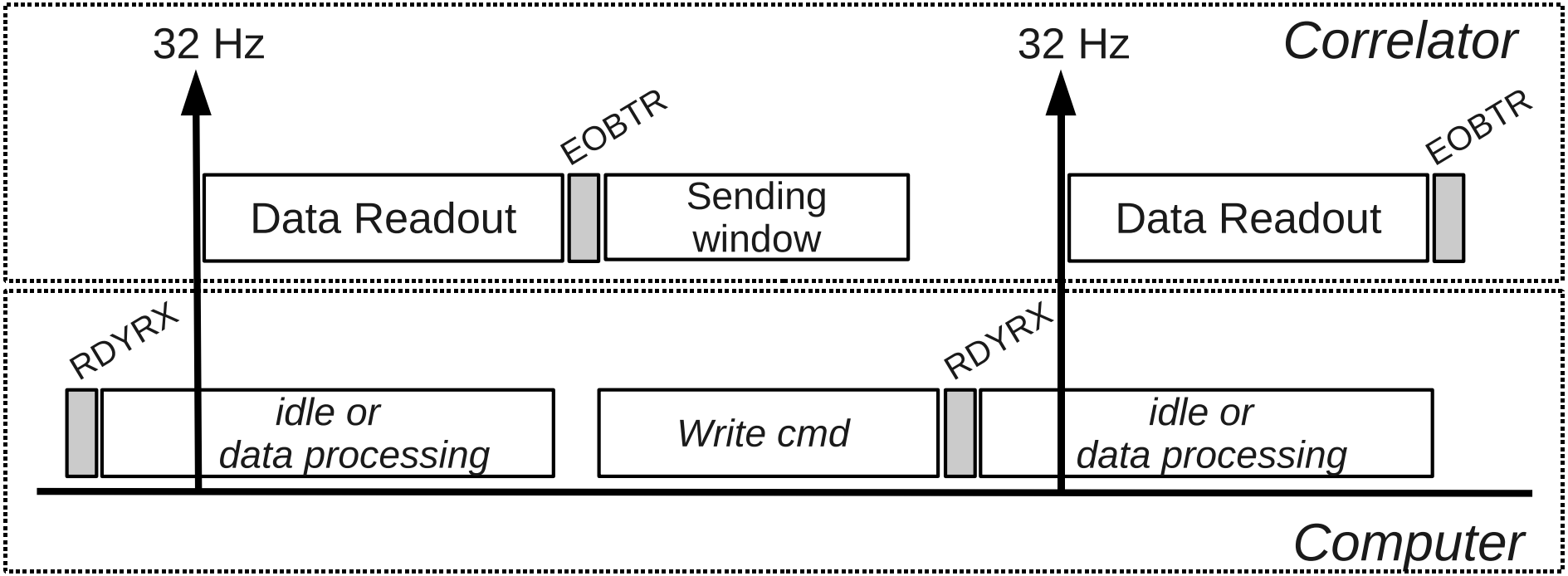

# Software architecture

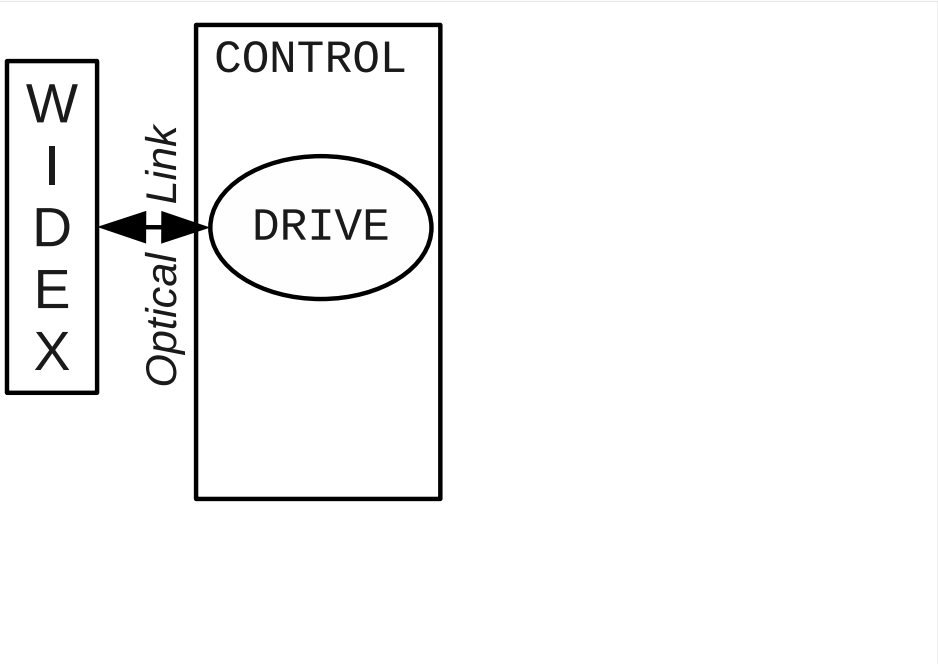


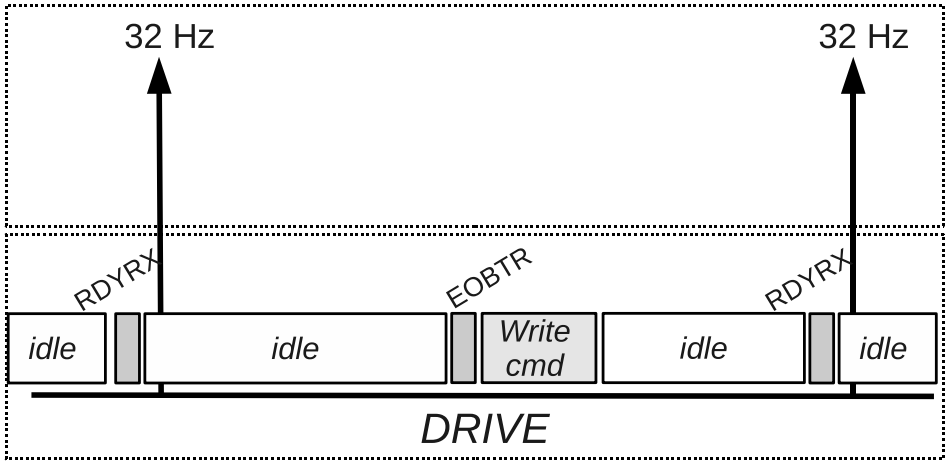

# Software architecture

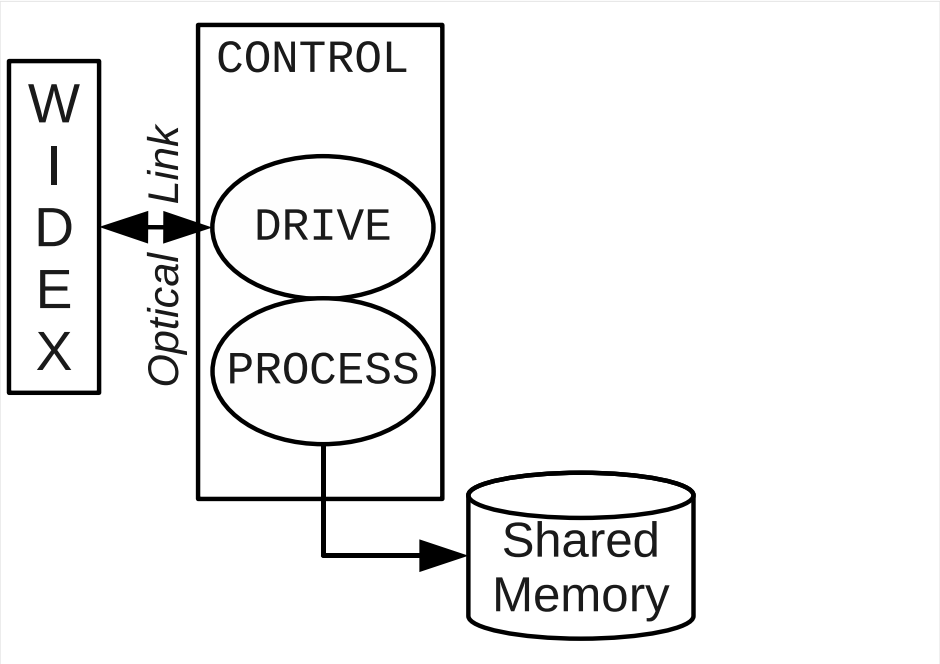


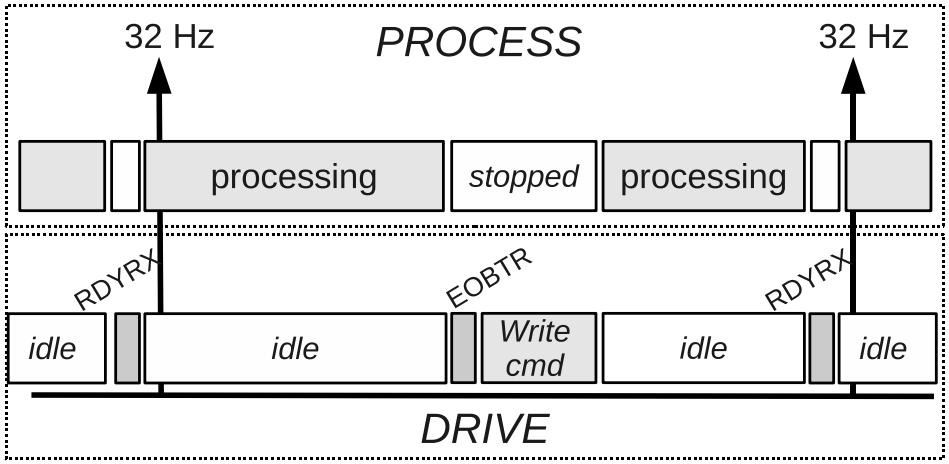

# Software architecture

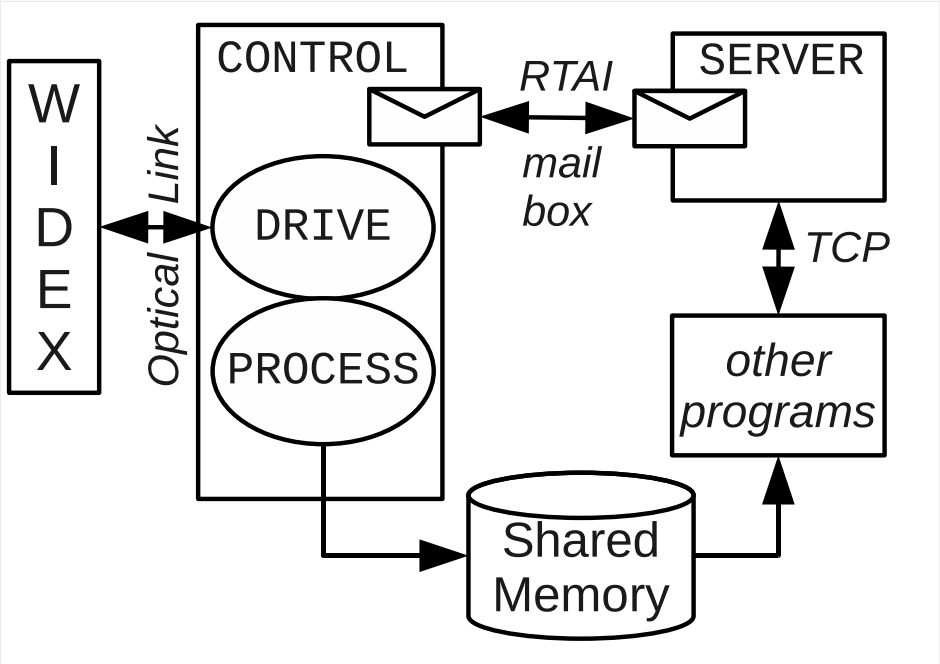


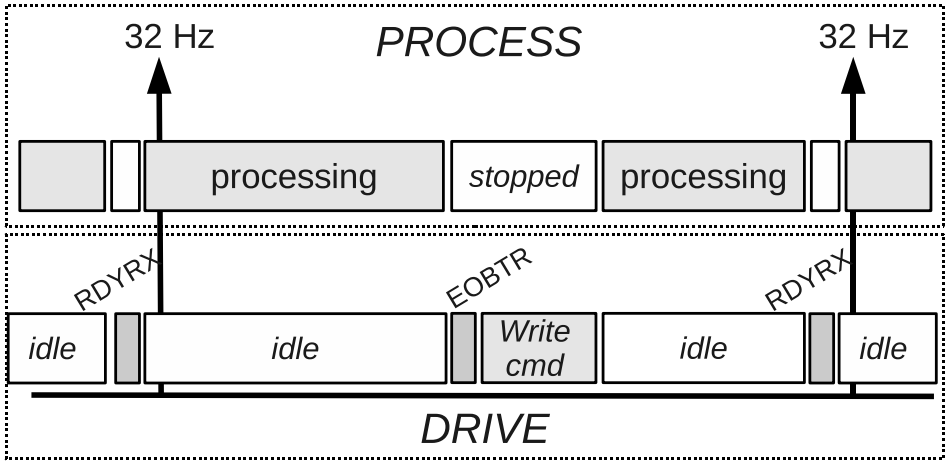

# Overview


1. Presentation
2. Technical choices
3. Software
4. Running modes
5. Conclusion

# Chip debugging

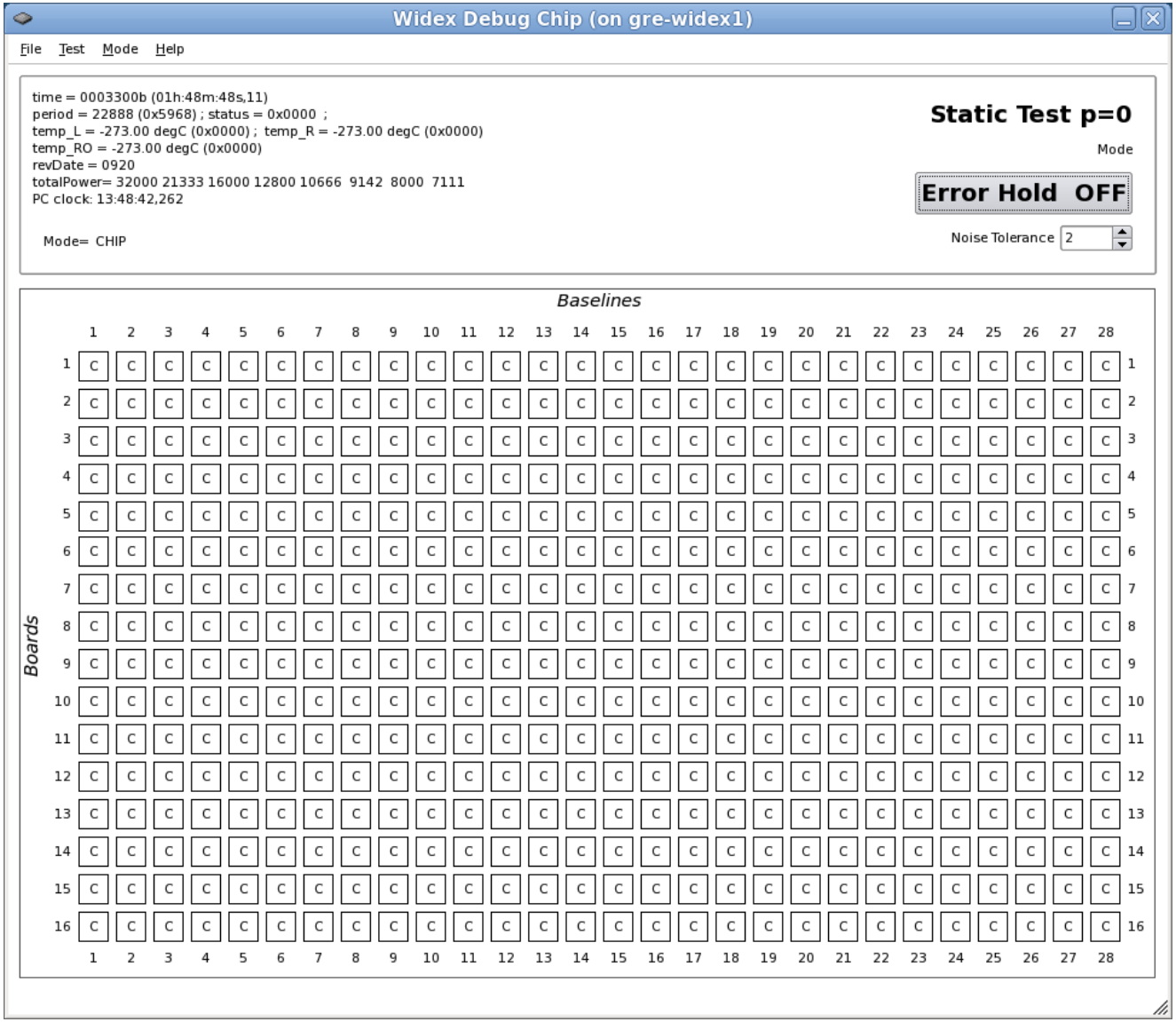

# Chip debugging

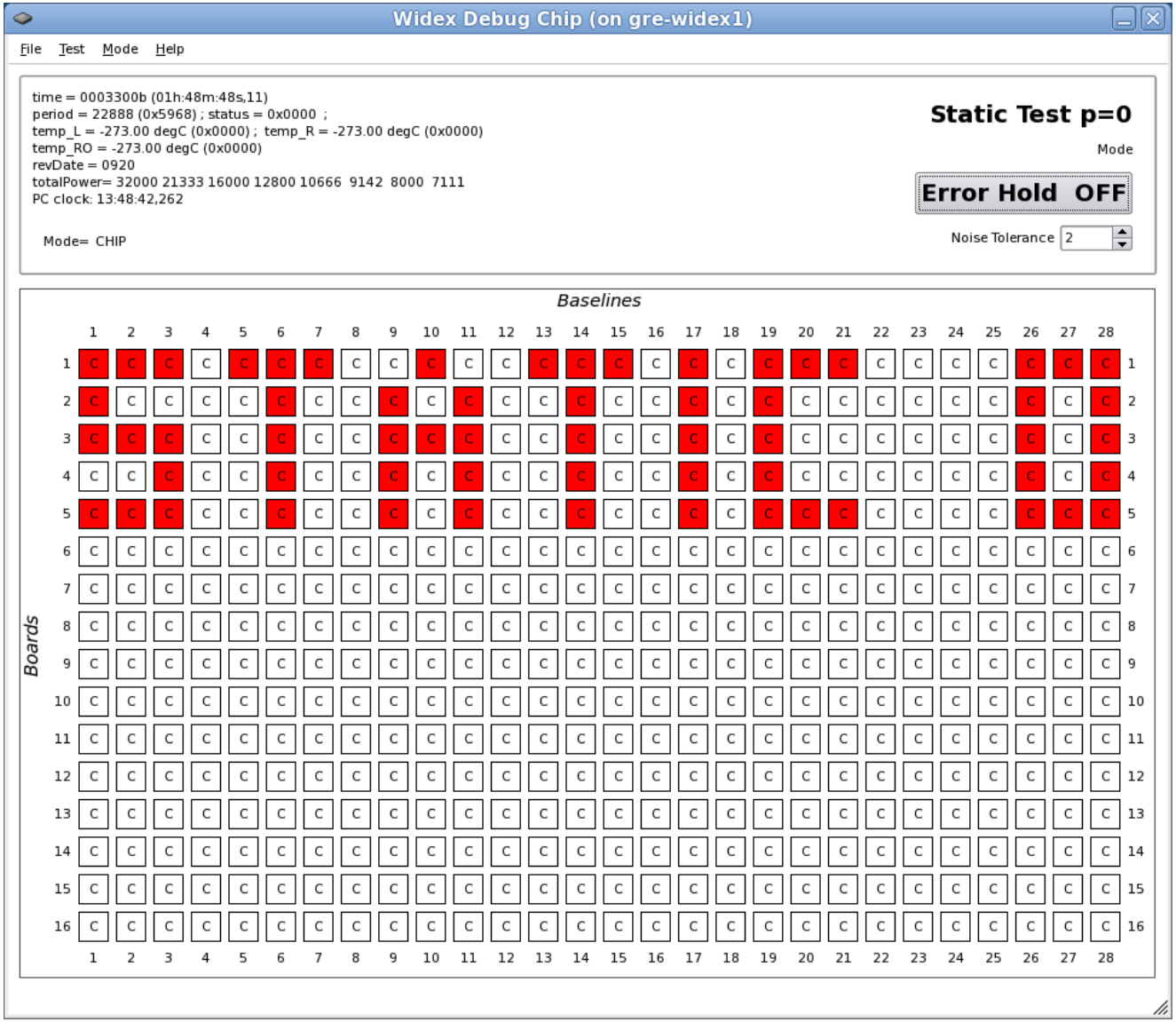

# Observing mode

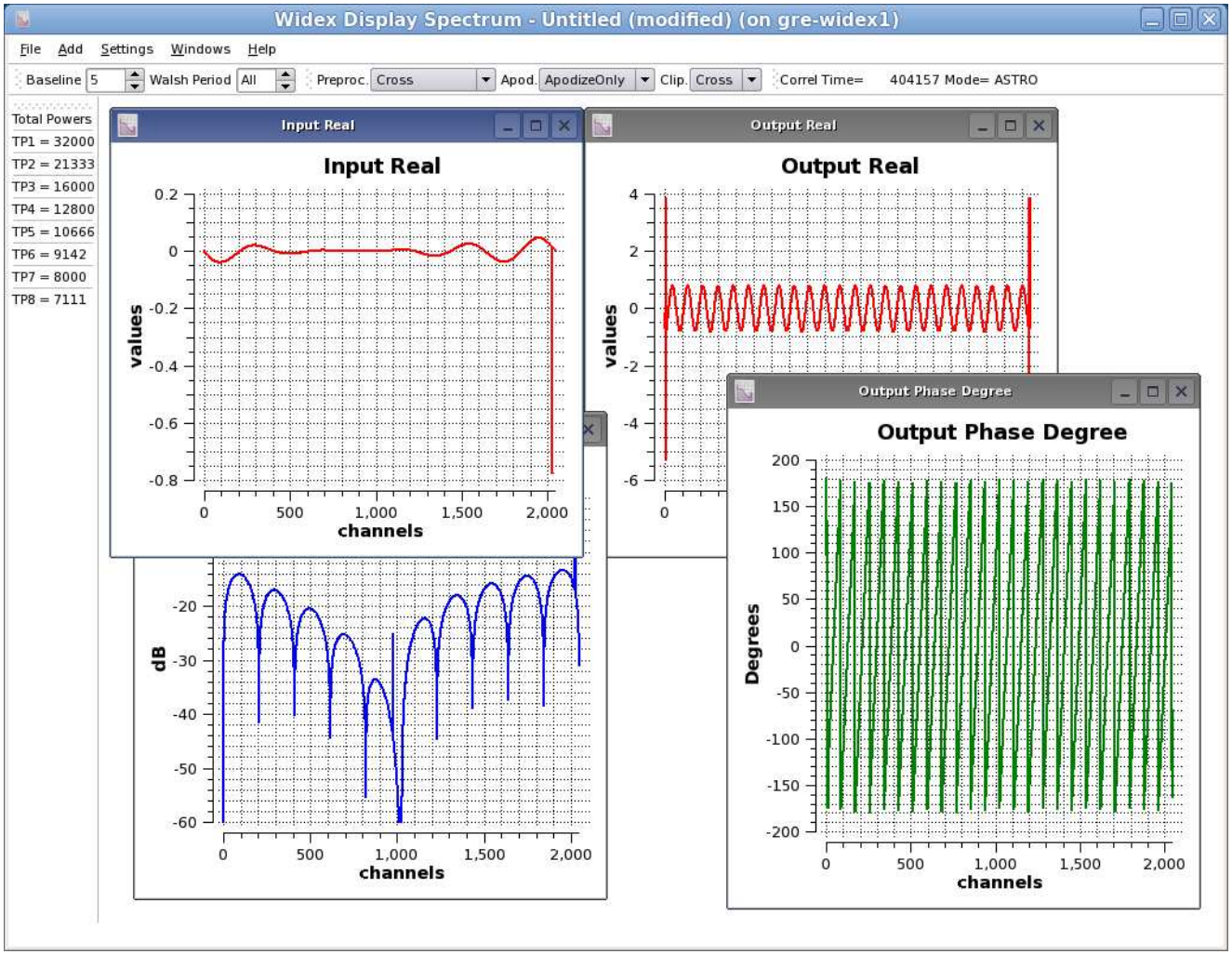

# Overview


1. Presentation
2. Technical choices
3. Software
4. Running modes
5. Conclusion

# Conclusion

- Innovative pair: CERN DDL – RTAI
- Real-time driving and processing.
- Free open-source software only

# Conclusion

- Innovative pair: CERN DDL – RTAI
- Real-time driving and processing.
- Free open-source software only

# Conclusion

- Innovative pair: CERN DDL – RTAI
- Real-time driving and processing.
- Free open-source software only

**To the edge of the universe**
**http://www.iram.fr**